E.C.N. NO.	ATC	CHANGE	DES	DATE
44-6811	–	REL FOR PROD (LAR-HOS/BRNG # 7340	BS	7/1/00
324-5316	A	WAS 6011546-B (EAR-NM982C)	AK	12/6/01
		(11/0" 8011)		
124-0418	B	WAS 3337584-C	JRH	1/24/03
		(EAR N1857) (W.O. #28398)		

B* | 1. WAS #10-24 x .50 | NV 1-24-03

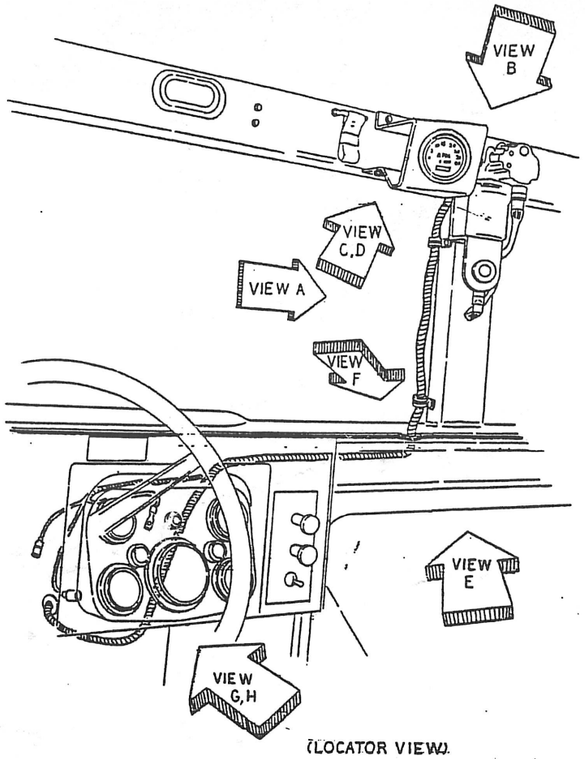

(LOCATOR VIEW)

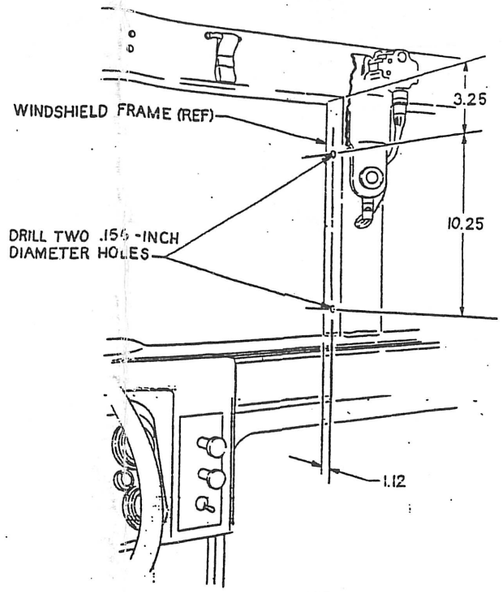

VIEW A

VEHICLE FRONT

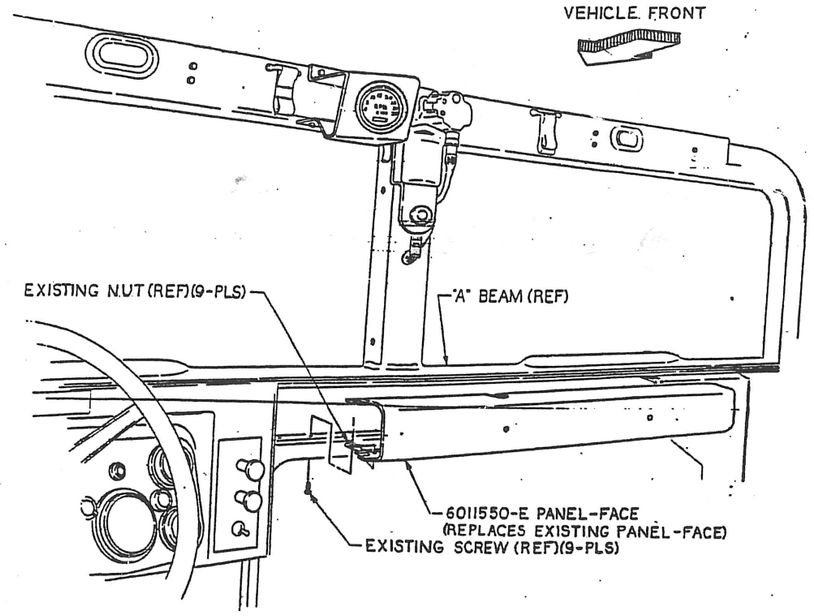

VIEW E

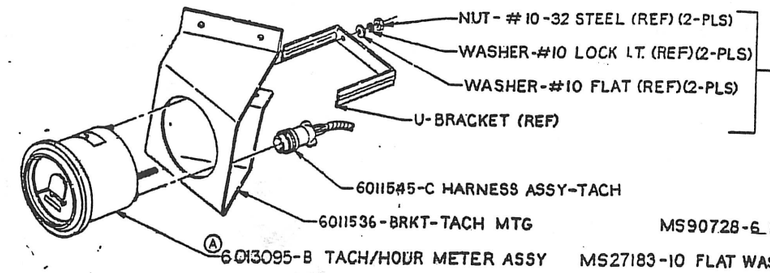

VIEW B

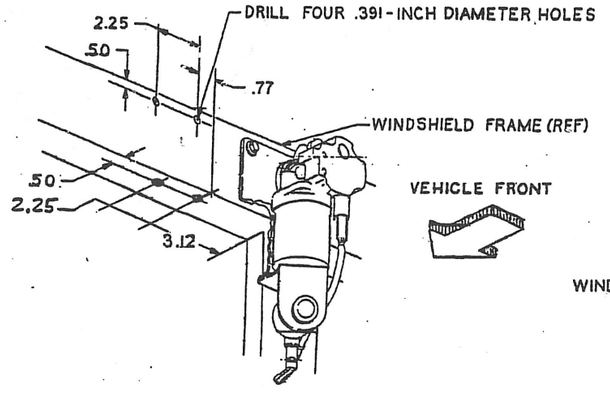

VIEW C

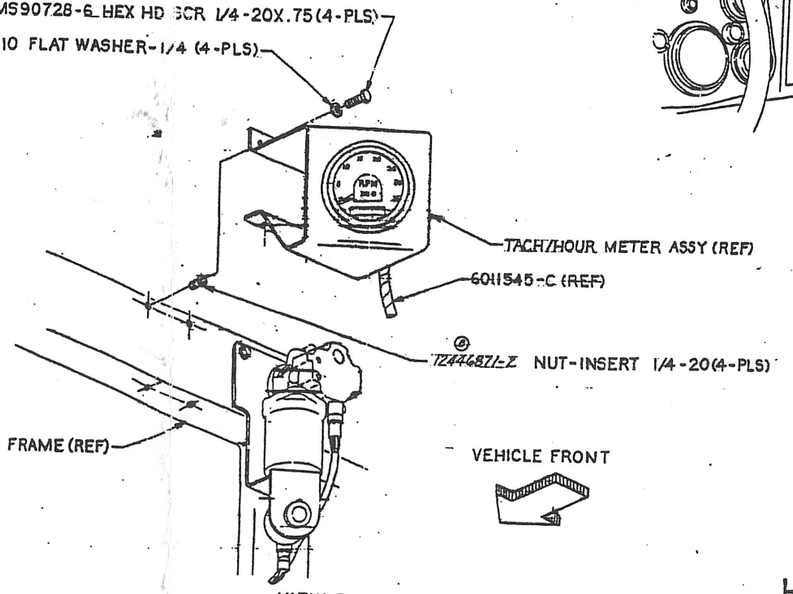

VIEW D

6011537-E

AM General Corporation

HMMWV A2

INSTALLATION DRAWING FOR KIT - TACH/HOUR METER

6011537- E

HMMWV-DIRECT SALES

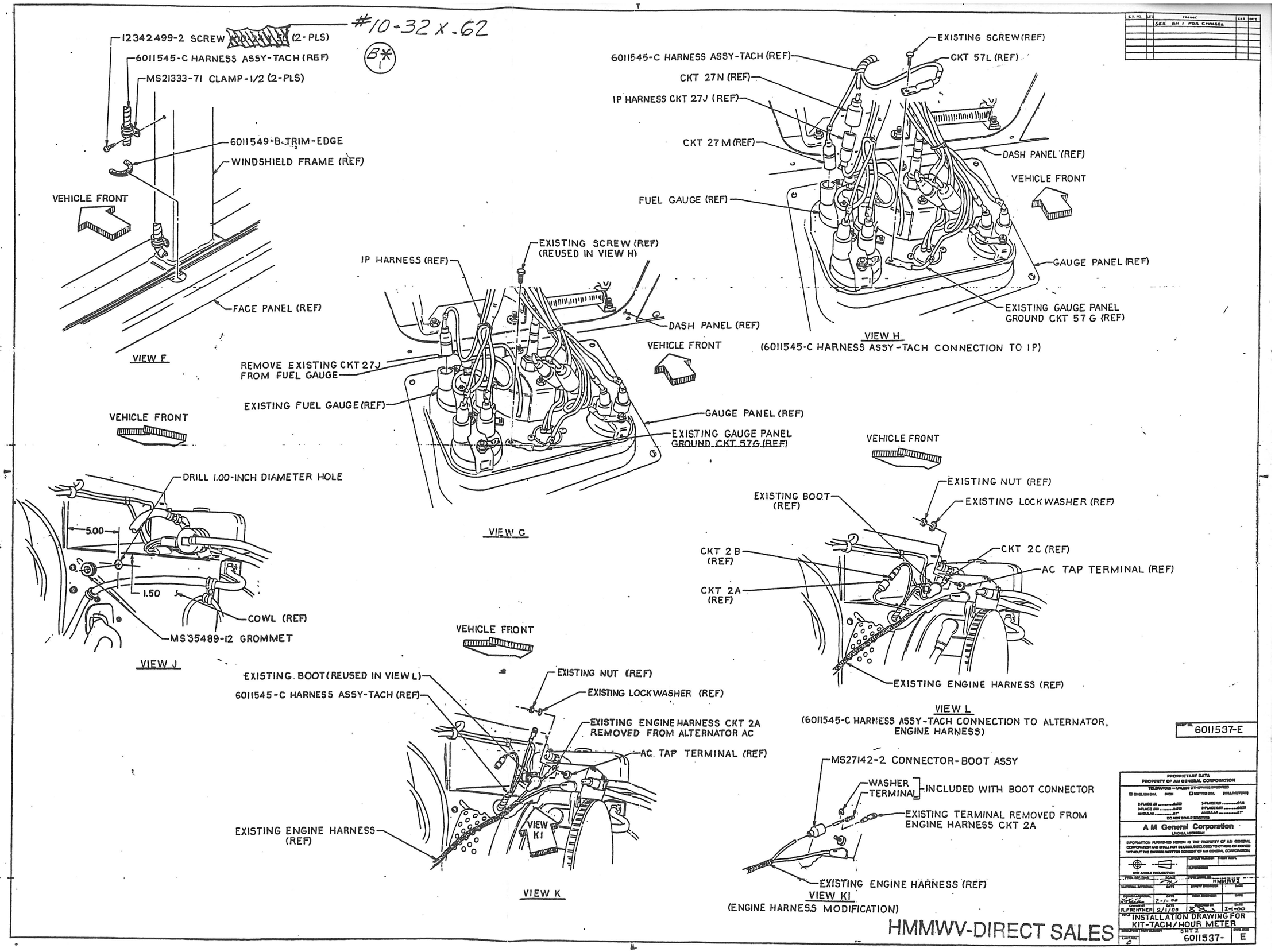

#10-32 X .62
B*
12342499-2 SCREW (2-PLS)
6011545-C HARNESS ASSY-TACH (REF)
MS21333-71 CLAMP-1/2 (2-PLS)
6011549-B TRIM-EDGE
WINDSHIELD FRAME (REF)
VEHICLE FRONT
FACE PANEL (REF)
VIEW F
EXISTING SCREW (REF)
CKT 57L (REF)
6011545-C HARNESS ASSY-TACH (REF)
CKT 27N (REF)
IP HARNESS CKT 27J (REF)
CKT 27M (REF)
DASH PANEL (REF)
VEHICLE FRONT
FUEL GAUGE (REF)
GAUGE PANEL (REF)
EXISTING GAUGE PANEL GROUND CKT 57 G (REF)
VIEW H
(6011545-C HARNESS ASSY-TACH CONNECTION TO IP)
EXISTING SCREW (REF) (REUSED IN VIEW H)
IP HARNESS (REF)
DASH PANEL (REF)
VEHICLE FRONT
REMOVE EXISTING CKT 27J FROM FUEL GAUGE
EXISTING FUEL GAUGE (REF)
GAUGE PANEL (REF)
EXISTING GAUGE PANEL GROUND CKT 57G (REF)
VIEW G
VEHICLE FRONT
DRILL 1.00-INCH DIAMETER HOLE
5.00
1.50
COWL (REF)
MS35489-12 GROMMET
VIEW J
VEHICLE FRONT
EXISTING NUT (REF)
EXISTING BOOT (REF)
EXISTING LOCKWASHER (REF)
CKT 2B (REF)
CKT 2C (REF)
AC TAP TERMINAL (REF)
CKT 2A (REF)
EXISTING ENGINE HARNESS (REF)
VIEW L
(6011545-C HARNESS ASSY-TACH CONNECTION TO ALTERNATOR, ENGINE HARNESS)
VEHICLE FRONT
EXISTING BOOT (REUSED IN VIEW L)
6011545-C HARNESS ASSY-TACH (REF)
EXISTING NUT (REF)
EXISTING LOCKWASHER (REF)
EXISTING ENGINE HARNESS CKT 2A REMOVED FROM ALTERNATOR AC
AC TAP TERMINAL (REF)
EXISTING ENGINE HARNESS (REF)
VIEW K1
VIEW K
MS27142-2 CONNECTOR-BOOT ASSY
WASHER
TERMINAL
INCLUDED WITH BOOT CONNECTOR
EXISTING TERMINAL REMOVED FROM ENGINE HARNESS CKT 2A
EXISTING ENGINE HARNESS (REF)
VIEW K1
(ENGINE HARNESS MODIFICATION)
6011537-E
PROPRIETARY DATA
PROPERTY OF AM GENERAL CORPORATION
A M General Corporation
LIVONIA, MICHIGAN
HMMWV
R. FRENTHER 2/1/00
2-1-00
INSTALLATION DRAWING FOR KIT-TACH/HOUR METER
SHT 2
6011537-
E
HMMWV-DIRECT SALES